p17 Helper Epitope Map

p24 Helper Epitope Map

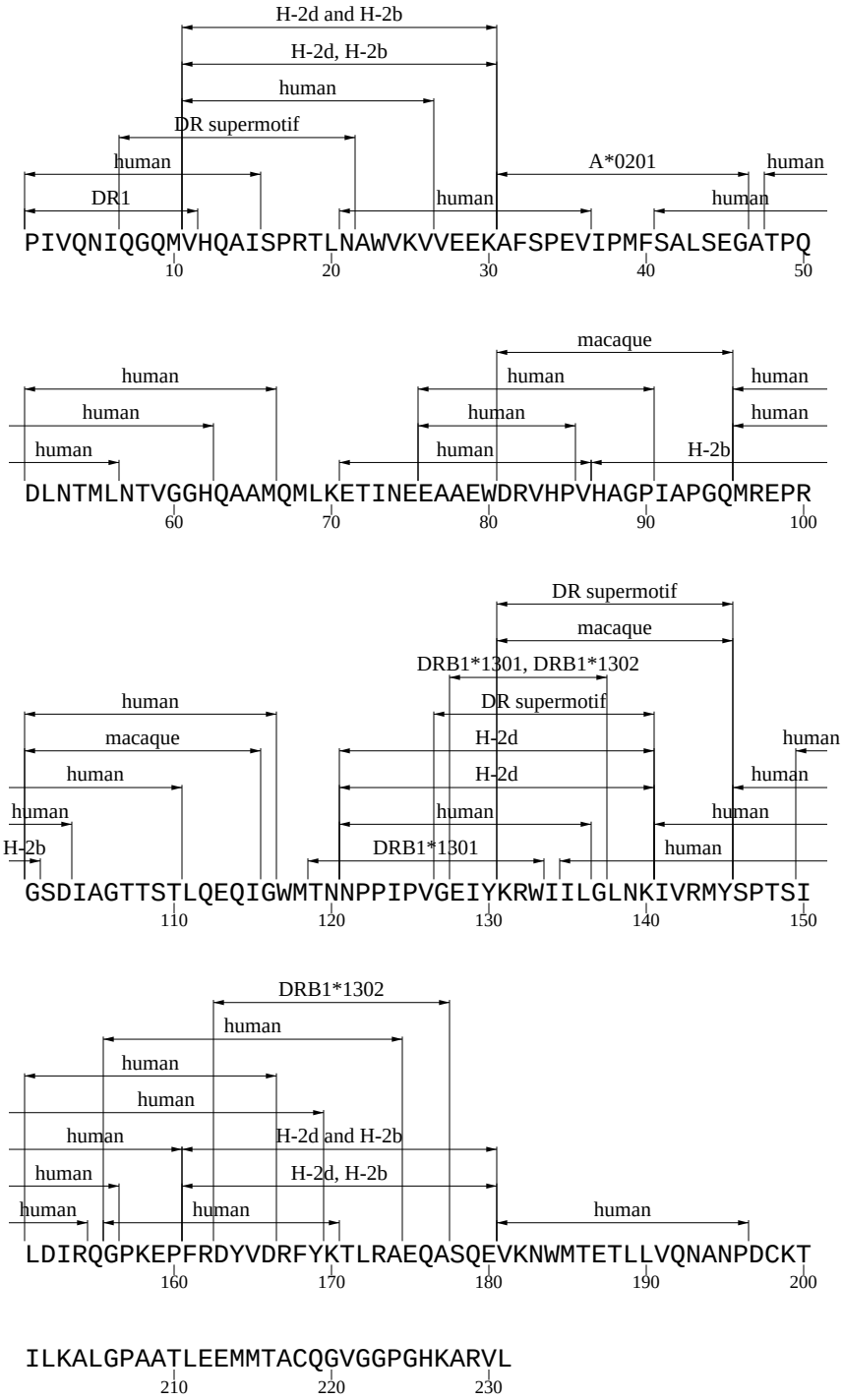

p2p7p1p6 Helper Epitope Map

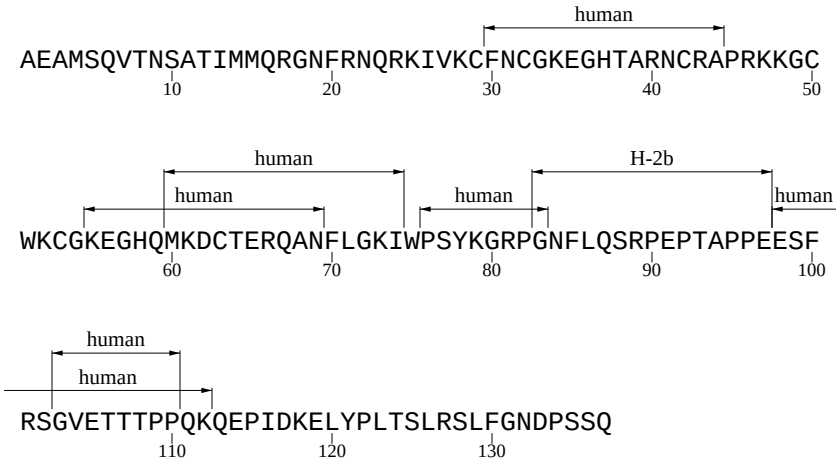

Protease Helper Epitope Map

```
PQVTLWQRPLVTIKIGGQLKEALLDTGADDTVLEEMSLPGRWKPKMIGGI
          10        20        30        40        50

GGFIKVRQYDQILIEICGHKAIGTVLVGPTPVNIIGRNLLTQIGCTLNF
          60        70        80        90
```

RT Helper Epitope Map

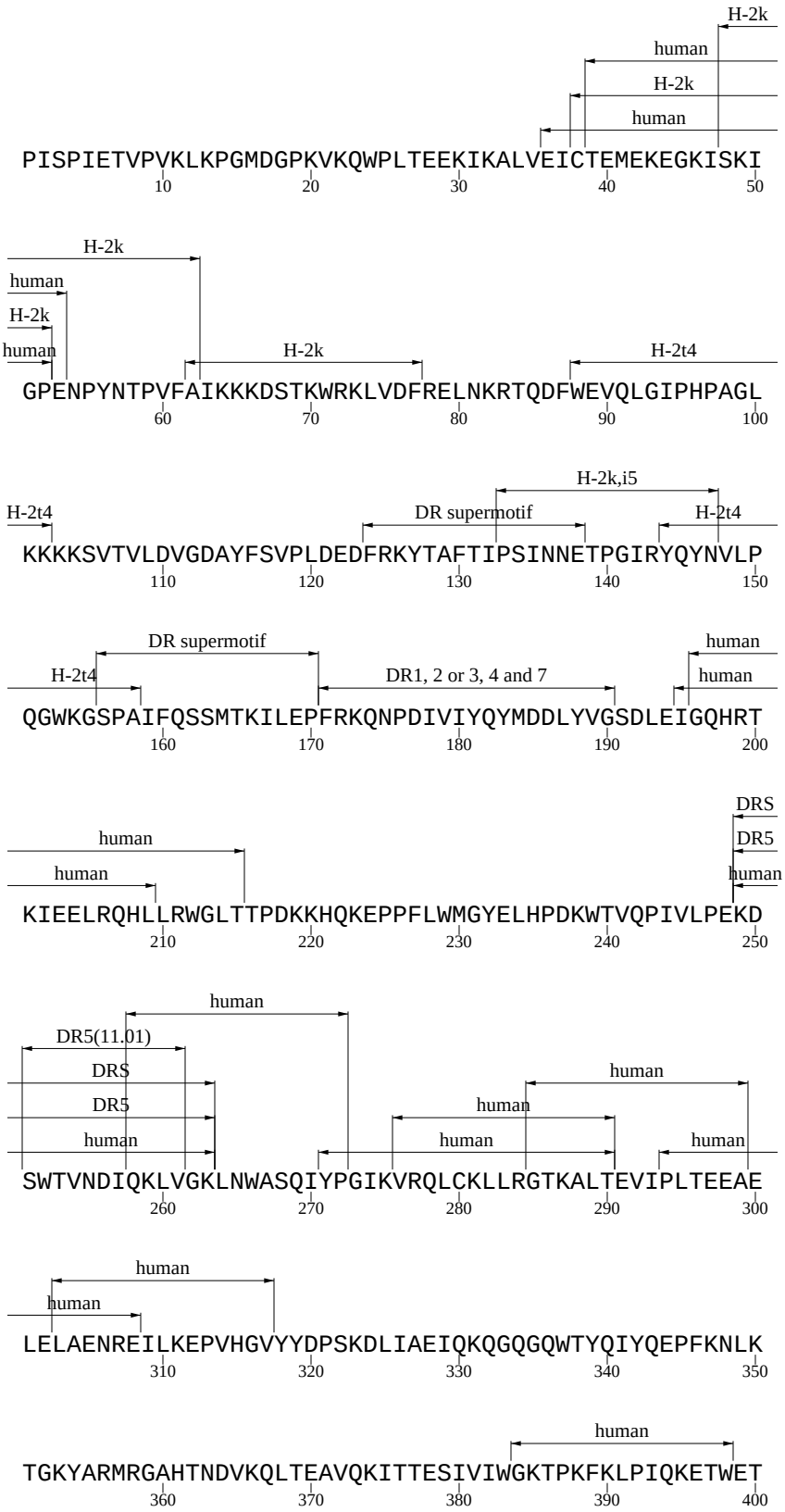

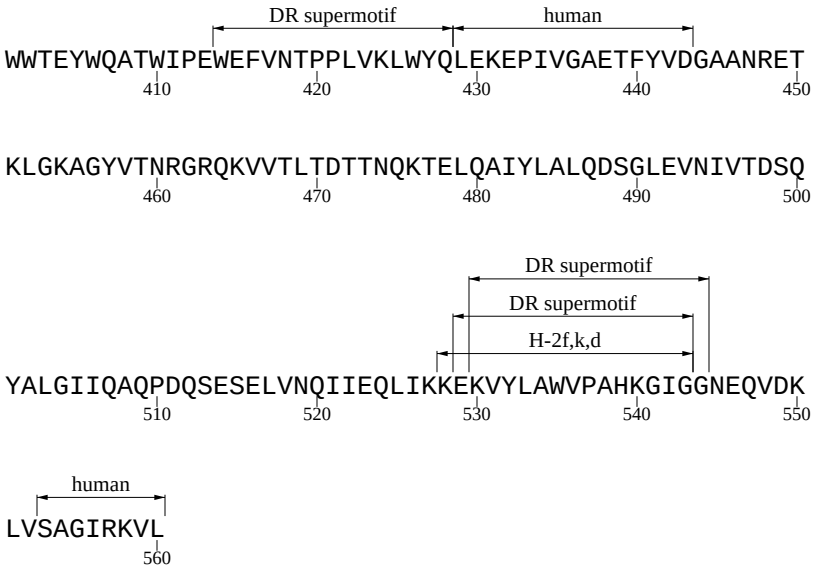
DR supermotif
human
WWTEYWQATWIPEWEFVNTPPLVKLWYQLEKEPIVGAETFYVDGAANRET
410
420
430
440
450
KLGKAGYVTNRGRQKVVTLTDTTNQKTELQAIYLALQDSGLEVNIVTDSQ
460
470
480
490
500
DR supermotif
DR supermotif
H-2f,k,d
YALGIIQAQPDQSESELVNQIIEQLIKKEKVYLAWVPAHKGIGGNEQVDK
510
520
530
540
550
human
LVSAGIRKVL
560

Integrase Helper Epitope Map

Rev Helper Epitope Map

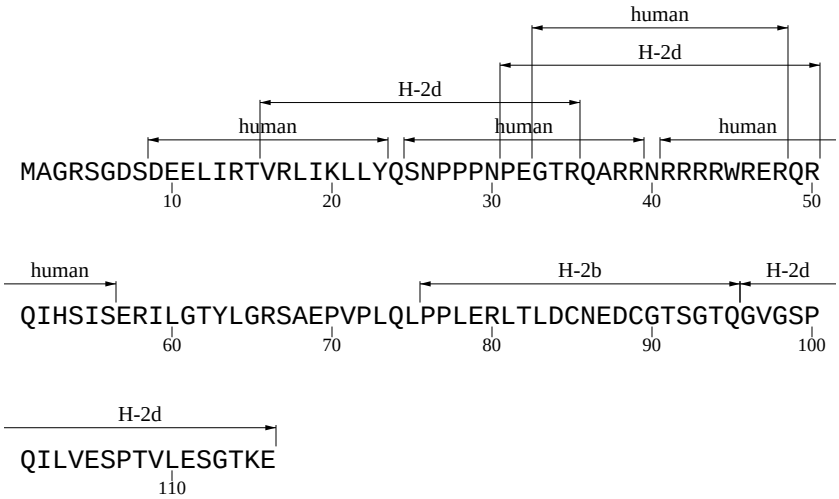

Tat Helper Epitope Map

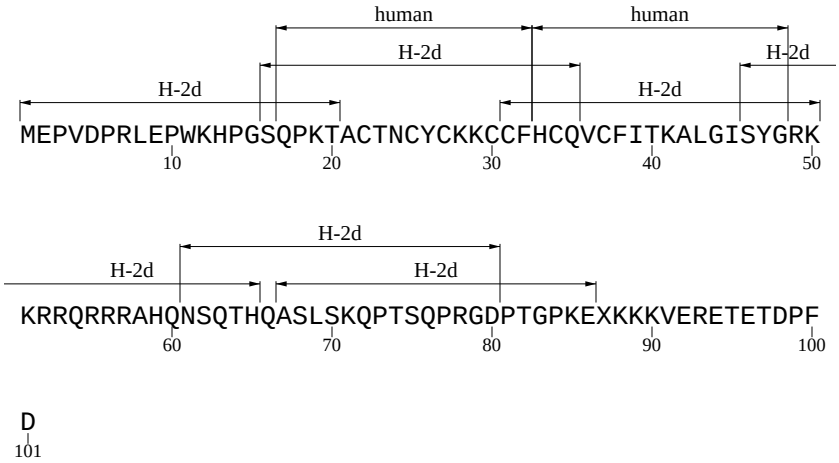

Vif Helper Epitope Map

```
MENRWQVMIVWQVDRMRIRTWKSLVKHHMYVSGKARGWFYRHHYESPHPR
         10        20        30        40        50

                 human                human
ISSEVHIPLGDARLVITTYWGLHTGERDWHLGQGVSIEWRKKRYSTQVDP
         60        70        80        90       100

ELADQLIHLYYFDCFSDSAIRKALLGHIVSPRCEYQAGHNKVGSLQYLAL
        110       120       130       140       150

AALITPKKIKPPLPSVTKLTEDRWNKPQKTKGHRGSHTMNGH
        160       170       180       190
```

Vpr Helper Epitope Map

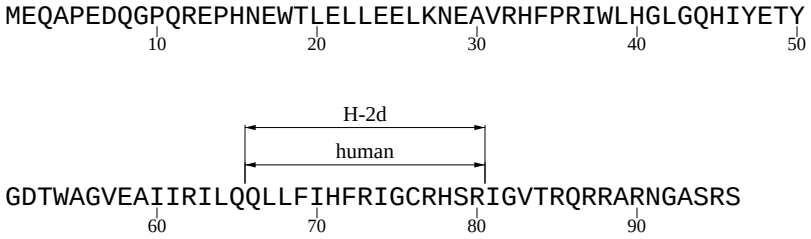

Vpu Helper Epitope Map

```
                         human
                         |<------------------>|
TQPIPIVAIVALVVAIIIAIVVWSIVIIEYRKILRQRKIDRLIDRLIERA
           10        20        30        40        50

EDSGNESEGEISALVEMGVEMGHHAPWDVDDL
           60        70        80
```

gp160 Helper Epitope Map

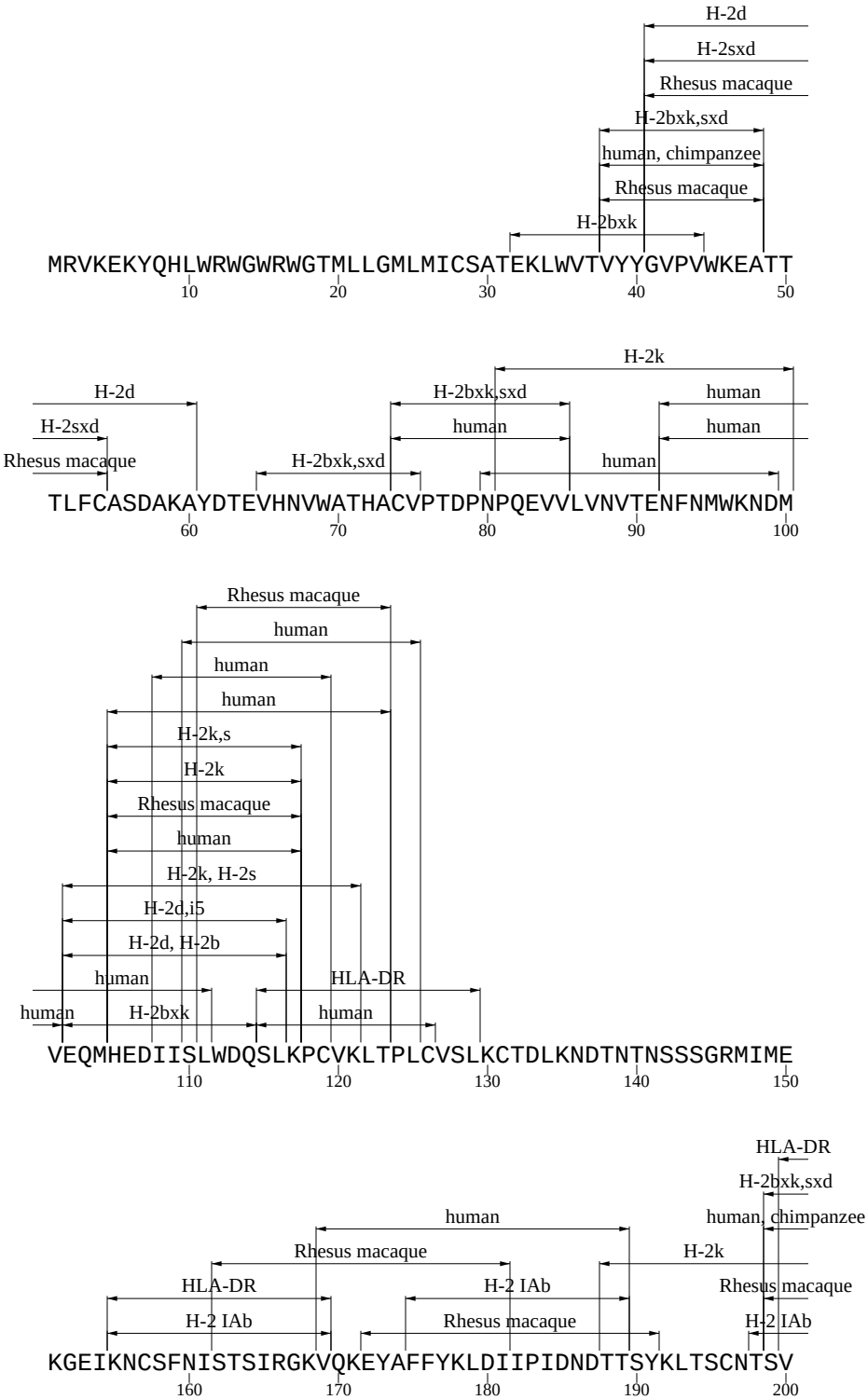

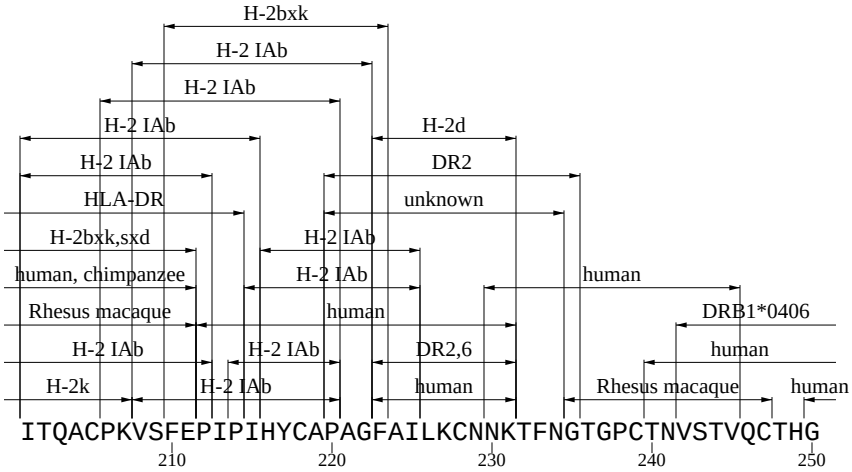
H-2bxk
H-2 IAb
H-2 IAb
H-2 IAb
H-2d
H-2 IAb
DR2
HLA-DR
unknown
H-2bxk,sxd
H-2 IAb
human, chimpanzee
H-2 IAb
human
Rhesus macaque
human
DRB1*0406
H-2 IAb
H-2 IAb
DR2,6
human
H-2k
H-2 IAb
human
Rhesus macaque
human
ITQACPKVSFEPIPIHYCAPAGFAILKCNNKTFNGTGPCTNVSTVQCTHG
210
220
230
240
250

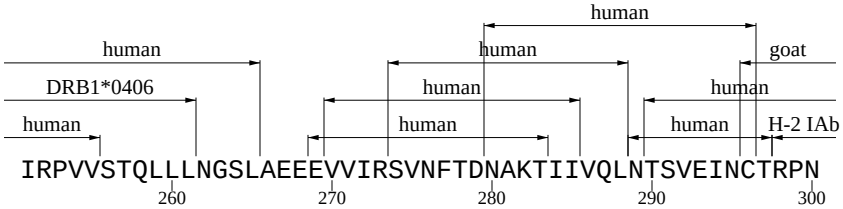
human
human
human
goat
DRB1*0406
human
human
human
human
human
H-2 IAb
IRPVVSTQLLLNGSLAEEEVVIRSVNFTDNAKTIIVQLNTSVEINCTRPN
260
270
280
290
300

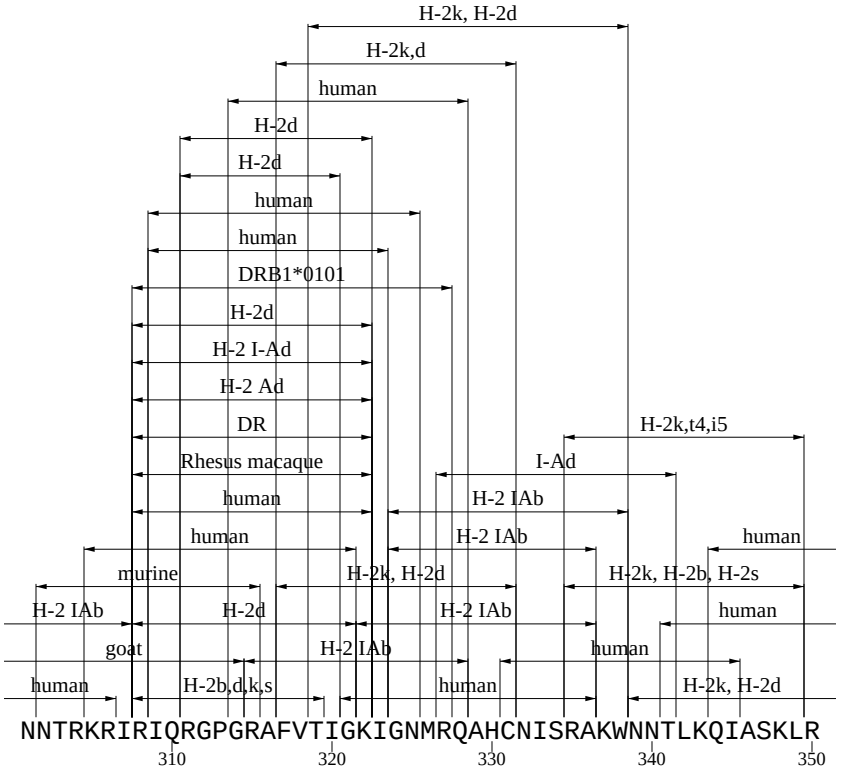
H-2k, H-2d
H-2k,d
human
H-2d
H-2d
human
human
DRB1*0101
H-2d
H-2 I-Ad
H-2 Ad
DR
H-2k,t4,i5
Rhesus macaque
I-Ad
human
H-2 IAb
human
H-2 IAb
human
murine
H-2k, H-2d
H-2k, H-2b, H-2s
H-2 IAb
H-2d
H-2 IAb
human
goat
H-2 IAb
human
human
H-2b,d,k,s
human
H-2k, H-2d
NNTRKRIRIQRGPGRAFVTIGKIGNMRQAHCNISRAKWNNTLKQIASKLR
310
320
330
340
350

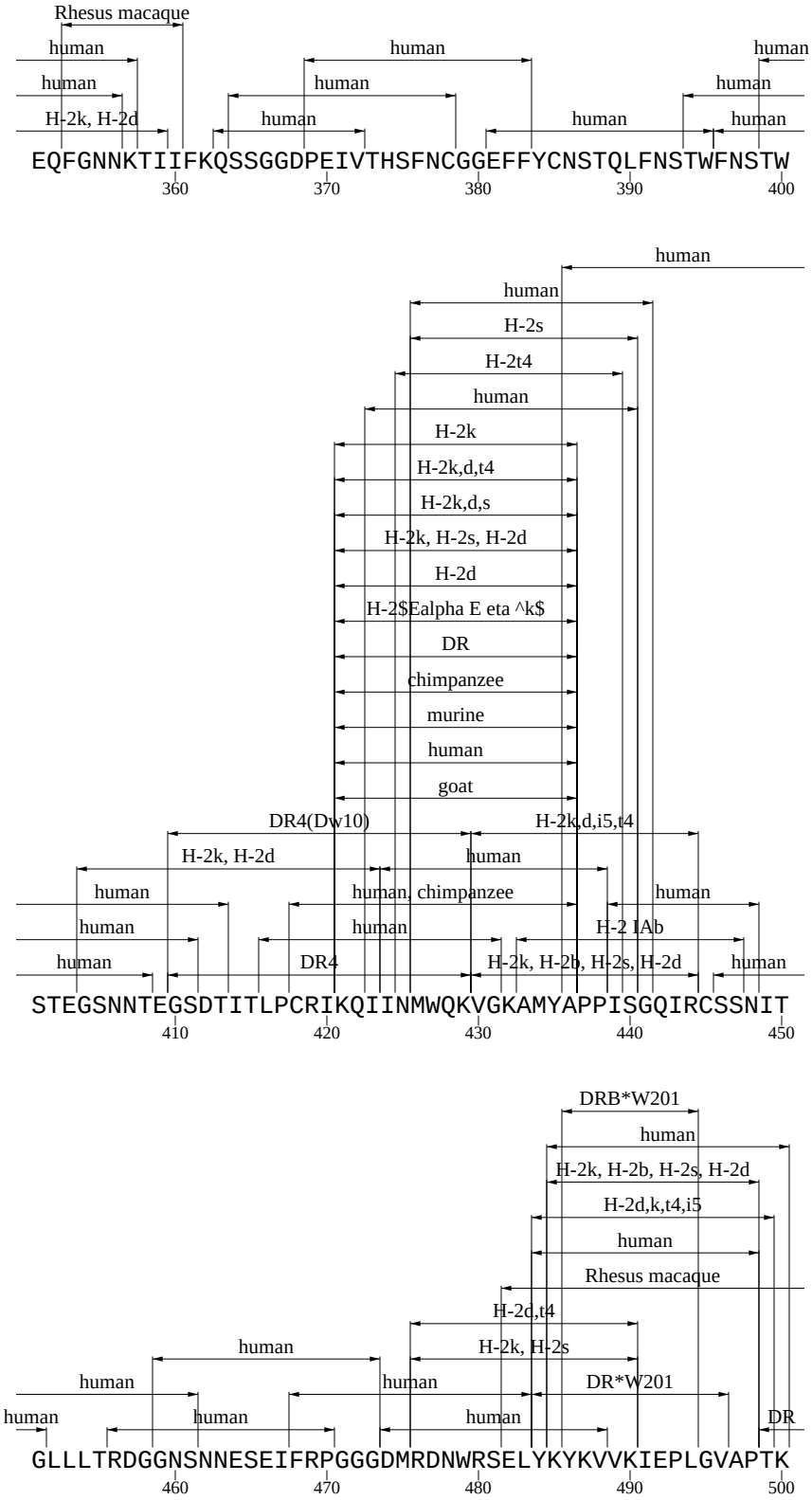
Rhesus macaque
human
human
human
human
human
human
H-2k, H-2d
human
human
human
EQFGNNKTIIFKQSSGGDPEIVTHSFNCGGEFFYCNSTQLFNSTWFNSTW
360
370
380
390
400
human
human
H-2s
H-2t4
human
H-2k
H-2k,d,t4
H-2k,d,s
H-2k, H-2s, H-2d
H-2d
H-2$Ealpha E eta ^k$
DR
chimpanzee
murine
human
goat
DR4(Dw10)
H-2k,d,i5,t4
H-2k, H-2d
human
human
human, chimpanzee
human
human
human
H-2 IAb
human
DR4
H-2k, H-2b, H-2s, H-2d
human
STEGSNNTEGSDTITLPCRIKQIINMWQKVGKAMYAPPISGQIRCSSNIT
410
420
430
440
450
DRB*W201
human
H-2k, H-2b, H-2s, H-2d
H-2d,k,t4,i5
human
Rhesus macaque
H-2d,t4
human
H-2k, H-2s
human
human
DR*W201
human
human
human
DR
GLLLTRDGGNSNNESEIFRPGGGDMRDNWRSELYKYKVVKIEPLGVAPTK
460
470
480
490
500

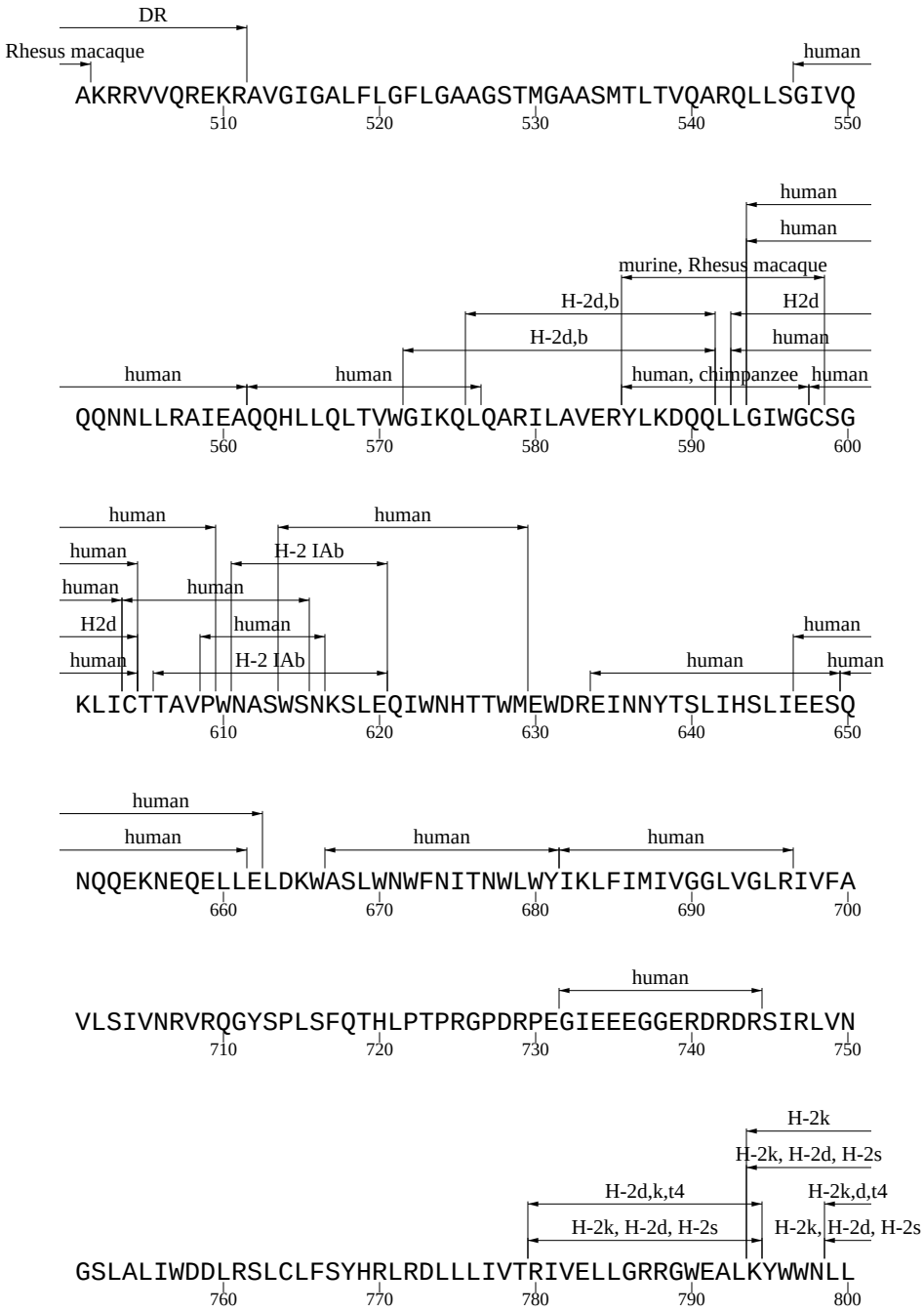
DR
Rhesus macaque
human
AKRRVVQREKRAVGIGALFLGFLGAAGSTMGAASMTLTVQARQLLSGIVQ
510 520 530 540 550
human
human
murine, Rhesus macaque
H-2d,b
H2d
H-2d,b
human
human
human
human, chimpanzee
human
QQNNLLRAIEAQQHLLQLTVWGIKQLQARILAVERYLKDQQLLGIWGCSG
560 570 580 590 600
human
human
human
H-2 IAb
human
human
H2d
human
human
human
H-2 IAb
human
human
KLICTTAVPWNASWSNKSLEQIWNHTTWMEWDREINNYTSLIHSLIEESQ
610 620 630 640 650
human
human
human
human
NQQEKNEQELLELDKWASLWNWFNITNWLWYIKLFIMIVGGLVGLRIVFA
660 670 680 690 700
human
VLSIVNRVRQGYSPLSFQTHLPTPRGPDRPEGIEEEGGERDRDRSIRLVN
710 720 730 740 750
H-2k
H-2k, H-2d, H-2s
H-2d,k,t4
H-2k,d,t4
H-2k, H-2d, H-2s
H-2k, H-2d, H-2s
GSLALIWDDLRSLCLFSYHRLRDLLLIVTRIVELLGRRGWEALKYWWNLL
760 770 780 790 800

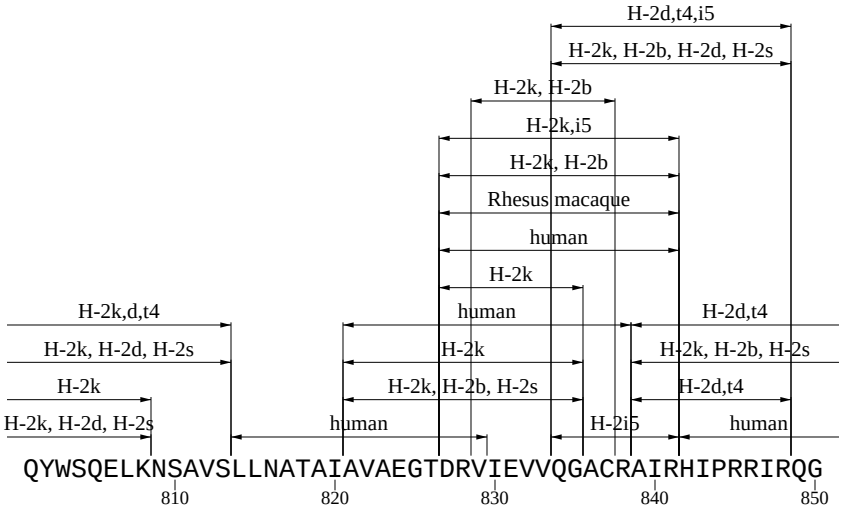
H-2d,t4,i5
H-2k, H-2b, H-2d, H-2s
H-2k, H-2b
H-2k,i5
H-2k, H-2b
Rhesus macaque
human
H-2k
H-2k,d,t4
human
H-2d,t4
H-2k, H-2d, H-2s
H-2k
H-2k, H-2b, H-2s
H-2k
H-2k, H-2b, H-2s
H-2d,t4
H-2k, H-2d, H-2s
human
H-2i5
human
QYWSQELKNSAVSLLNATAIAVAEGTDRVIEVVQGACRAIRHIPRRIRQG
810
820
830
840
850

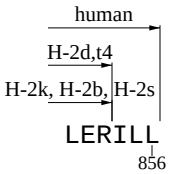
human
H-2d,t4
H-2k, H-2b, H-2s
LERILL
856
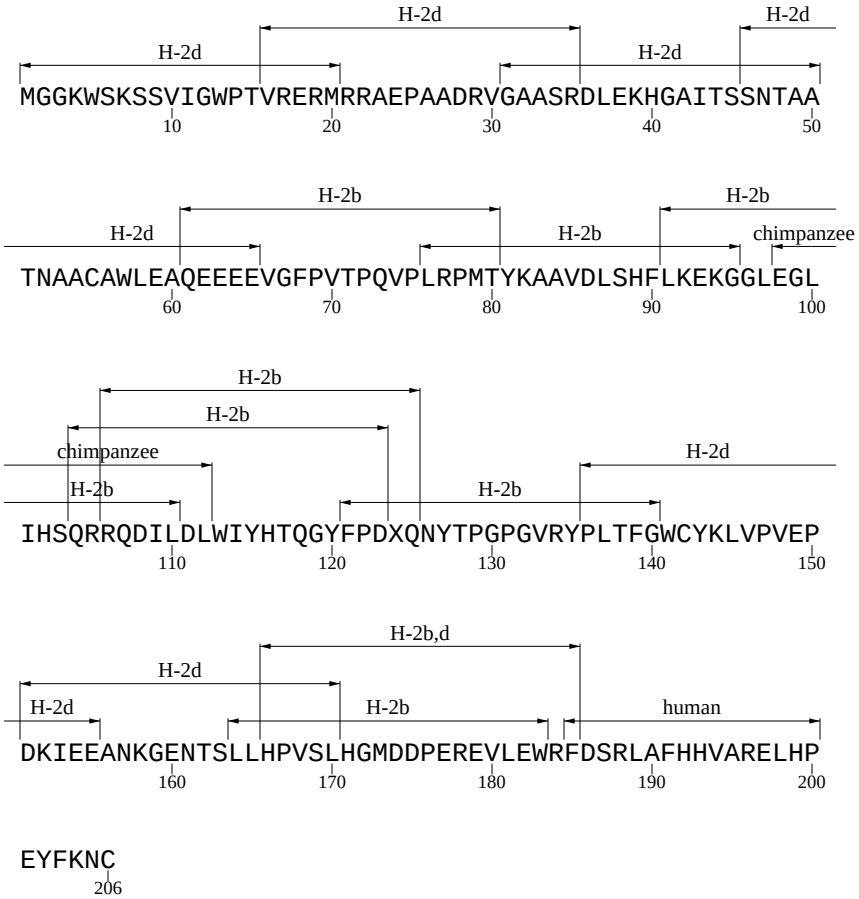
Nef Helper Epitope Map